TI 3201e	Product Information	thermokon asia pacific
PDE1-Series (dP)	Air Differential Pressure Sensor with Active Output	

The PDE1-Series (dP) is designed to measure differential pressure in HVAC systems with non-flammable gases and non-aggressive gases. The sensor has two separate control outputs (0...10V / 4...20mA) for the dP measurements. Eight different dP ranges are selectable via internal DIP switches. Practical snap-in cover. Optional LCD display is available.

Use

Compatible to all common HVAC DDC and Analog Controls systems, with/without Building Automation System

Differential pressure measurement in HVAC systems

Monitoring differential pressure of fans in air systems

Supervision of the status of heating / cooling coils preventing overheating / freezing

Used in all common HVAC applications

Features

Sensor with active outputs

Eight internal selectable dP measuring range, selectable response time

Optional LCD display, selectable display units (Pa, inWC, mmWC, mbar, psi)

Professional and practical product design, withstands rough environmental conditions

Easy to use, install and maintain

Product Range

Model	Measuring Range			Max. Applied Pressure	Burst Pressure	Display
	-25...25 Pa -50...50 Pa -100...100 Pa -150...150 Pa 0...25 Pa 0...50 Pa 0...100 Pa **0...250 Pa***	-100...100 Pa 0...100 Pa 0...250 Pa 0...500 Pa 0...1000 Pa 0...1500 Pa 0...2000 Pa **0...2500 Pa ***	0...1000 Pa 0...1500 Pa 0...2000 Pa 0...2500 Pa 0...3000 Pa 0...4000 Pa 0...5000 Pa **0...7000 Pa***	200kPa	400kPa	LCD
PDE1.OAa	•			•	•	
PDE1.EAa		•		•	•	
PDE1.FAa			•	•	•	
PDE1.PAa	•			•	•	•
PDE1.GAa		•		•	•	•
PDE1.HAa			•	•	•	•

*** Factory Default Settings**

Sensor Specification

Sensor Specification	Measured		Air Differential Pressure
	Sensor Characteristics		Active
	Sensor Output		0…10V / 4…20mA
	Accuracy		±1.5% of max. measuring range OR ±6 Pa @ <250 Pa
	Max. Applied Pressure		200 kPa
	Burst Pressure		400 kPa
	Response Time		0.8 or 4 seconds (selectable)
	Measuring Range		See Product Range, Page 1
	Optional Measuring Range		See Product Range, Page 1

Technical Information

Electrical Information	Power Supply		DC 15...24V (±10%) or AC 24V (±10%)
	Frequency		50 / 60 Hz @ AC 24V
	Output Load	0…10V	Min. load 1kΩ @ AC/DC 24V
		4…20mA	Max. load 500Ω @ DC 24V
	Power Consumption		Max. 1.3W
Mechanical Information	Terminal Clamp		Screw terminal, max. 1.5mm²
	Connection Nozzle Dimension		Ø6.3 x 1.15mm, L=10mm
	Cable Entry		M20, Ø6...Ø8mm cables
	Sensing Element Position		Internal
User Interface	Range Selection		DIP switches inside the housing
Color and Material	Housing Cover		PA6, White
	Housing Bottom		PA6, White
	Lock Screws		Snap Connector
	Cable Gland		ABS, RAL 7042 (Traffic Grey A)
	Gland Rubber Seal		ENSOFT50, RAL 9016 (Traffic White)
	User element		DIP Switches
	Display	PAa/GAa/HAa	LCD, Black & White with backlight
	Connection Nozzle		PA6, White
Environmental Condition	Operation Temperature		-10^{0}C...+50^{0}C
	Operation Humidity		<85% r.h., no condensation
	Transport Temperature		-35^{0}C...+70^{0}C
	Transport Humidity		< 90% r.h.
	Storage Temperature		-20^{0}C...+70^{0}C
	Storage Humidity		< 85% r.h., no condensation
Norms and Directives	IP- Rating		IP54 according to IEC60529
	Safety Class		III to EN 60 730
	Product Standard 1		Automatic Electric. Controls for household and similar use
	Product Standard 2		2009/EN 60 730-1
	CE Conformities		2004/108/EG Electromagnetic Compatibility EMV
	Emitted Interference		2000/EN60730-1 Emitted Interference
	Interference Resistance		2000/EN60730-1 Interference Resistance
	RoHS Compatibility		RoHS 2011/65/EC
	Operation Climatic Condition		IEC 60721-3-3
	Operation Mechanical Condition		IEC 60721-3-2 to class 2M2
	Transport to Climatic Condition		IEC 60721-3-2
	Transport Mechanical Condition		IEC 60721-3-2 to class 2M2
	Storage Climatic Condition		IEC 60721-3-1
	Storage Mechanical Condition		IEC 60721-3-1 to class 2M2

Miscellaneous

Accessories	Mounting Kit, Included in delivery	2 plastic duct connecters; 2m Silicone tube
	Accessory not included in delivery	Auto Calibration Module
Shipping & Handling	Product Dimension (L x W x H) / Weight	95mm x 90mm x 36mm / 100gr.
	Transport and Storage dimension (L x W x H) / Weight	175mm x 130mm x 45mm / 215gr.
	Packaging Material	Rigid Cardboards Packaging
Order Notes	Order Code	See Product Range, Page 1, e.g. PDE1.PAa

Advices

Security Advices

Caution

The installation and assembly of electrical equipment may only be performed by a skilled electrician.

The products must not be used in any relation with equipment that supports, directly or indirectly, human health, life or with applications that can result in danger for people, animals or real value.

Mounting Advices

Caution

For connecting the device, the process lines must be unpressurized.

Note the suitability of the device for the medium to be measured.

Note the maximum pressures.

Installation Notes

Caution

The product must be installed at a suitable place and within the range of validity of the local electrical installation laws and regulations.

A prerequisite for the operation is a proper installation of all electrical supply, control and sensing leads as well as the pressurized connection line.

Before installing the device, the leak tightness of the pressurized connection lines must be inspected.

To gain protection IP 65 according to EN 60527 the cover has to be bolted at the prepared position, e.g. using a screw 3,5x10 mm according to EN 7981.

Commissioning Notes

Caution

Sensing devices with transducers should in principle be operated in the middle of the measuring range.

The ambient temperature of the transducer electronics should be kept constant.

Zero Calibration

Supply voltage must be connected one hour before the zero-point calibration is carried out.

- Release both tubes from the pressure inlets + and -
- Press the button S1 until the LED lights permanently
- Wait until the LED flashes again and reinstall the connection tubes to the pressure ports (note + and -)

In normal operation zero point calibration should be executed every 12 months.

Dimensions

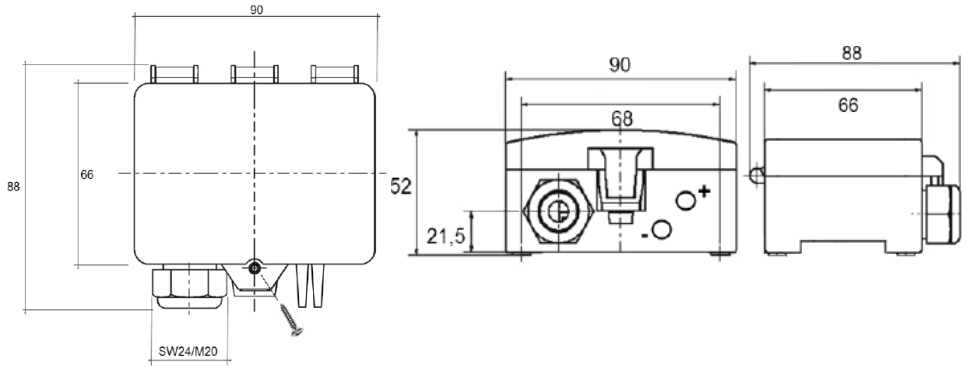

A.) Meaured value and unit

B.) Range : measuring range selected

C.) Timebase : response time selected

D.) U : measured voltage output

E.) I : measured current ouput

Connection

Terminals Connection

1	2	3	4
15...24V- / 24V~	GND	Out 0...10V	Out 4...20mA

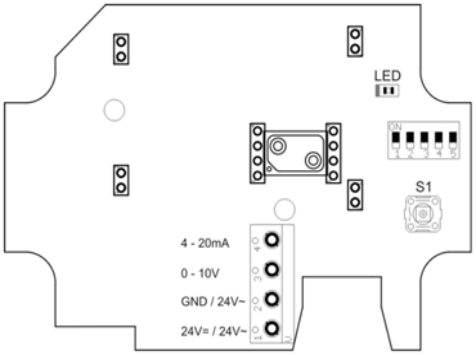

1.) DIP switch 1-3 to select measuring range

2.) DIP switch 4 select response time

3.) DIP switch 5 select LCD backlight (only or model with LCD)

4.) Press button S1 to change display unit (only for model with LCD)

(Pa > inWC > mmWC > kPa > mbar > psi)

DIP Switch	Switch Setting			Measuring Range		
	Switch 1	Switch 2	Switch 3	PDE1. OAa / PAa	PDE1. EAa / GAa	PDE1. FAa / HAa
	OFF	OFF	OFF	0...25 Pa	-100...100 Pa	0...1000 Pa
	OFF	OFF	ON	0...50 Pa	0...100 Pa	0...1500 Pa
	OFF	ON	OFF	0...100 Pa	0...250 Pa	0...2000 Pa
	OFF	ON	ON	0...250 Pa (Default)	0...500 Pa	0...2500 Pa
	ON	OFF	OFF	-25...25Pa	0...1000 Pa	0...3000 Pa
	ON	OFF	ON	-50...50 Pa	0...1500 Pa	0...4000 Pa
	ON	ON	OFF	-100...100 Pa	0...2000 Pa	0...5000 Pa
	ON	ON	ON	-150...150 Pa	0...2500 Pa (Default)	0...7000 Pa (Default)

DIP switch for Meauring Range

DIP Switch	Switch Setting	Response Time
4	OFF	0.8 sec.
4	ON	4 sec. (Default)

DIP switch for Response Time

DIP Switch	Switch Setting	Disppay Backlight
5	OFF	Backlight OFF (Default)
5	ON	Backlight ON

DIP switch for LCD backlight